ULTIMATE STEEL

KELSO, WASHINGTON (SE 1/4, S2, T7N, R2W)

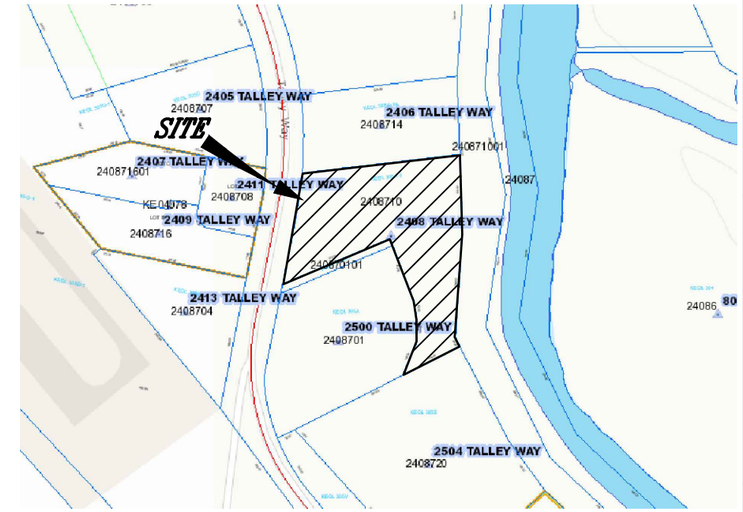

VICINITY MAP
NO SCALE

erosion control
inspection required
Contact Inspection Services
Before You Begin Any Sitework

PLOT PLAN NOTE:
PLOT PLAN SHOWN IN PLAN SET WAS PROVIDED BY OTHERS.
SGA PROVIDED THE STORMWATER REPORT AND PLAN SET.

PARCEL INFORMATION

2408710
SE 1/4, S2, T7N, R2W
2408 TALLEY WAY
KELSO, WA 98626

CONTACT/ENGINEER

SGA ENGINEERING, PLLC
2005 BROADWAY
VANCOUVER, WASHINGTON 98663
PHONE (360) 993-0911

PROPERTY OWNER

KAY BURRELL
2621 S. FRONTAGE RD
REXBURG, ID 83440

SHEET INDEX

SHEET	DESCRIPTION
1.	COVER SHEET
2.	EXISTING CONDITIONS SHEET
3.	NATIVE VEGETATION PRESERVATION AREA SHEET
4.	EROSION CONTROL AND DRAINAGE SHEET
5.	EROSION CONTROL NOTES
6.	EROSION CONTROL DETAILS
7.	DRAINAGE DETAILS
8.	BIORETENTION PLANTINGS

SGA ENGINEERING & DESIGN
CIVIL ENGINEERING ~ LAND PLANNING
DEVELOPMENT SERVICES
LANDSCAPE ARCHITECTURE

2005 BROADWAY
VANCOUVER, WA 98663
PHONE (360)993-0911
FAX (360)993-0912

COVER SHEET

ULTIMATE STEEL

KELSO WASHINGTON

REVISIONS

DESIGNED BY:	KMF
DRAWN BY:	KMF
CHECKED BY:	KRS
SCALE:	N/A

JOB NUMBER	SHEET
2218	1 of 6

DATE PLOTTED: Aug. 04, 2023 - 4:36 PM SGA DRAWING FILE: W:\DWG\2218-ULTIMATE STEEL ERECTION\DRAWINGS\ULTIMATE STEEL STORMWATER.DWG

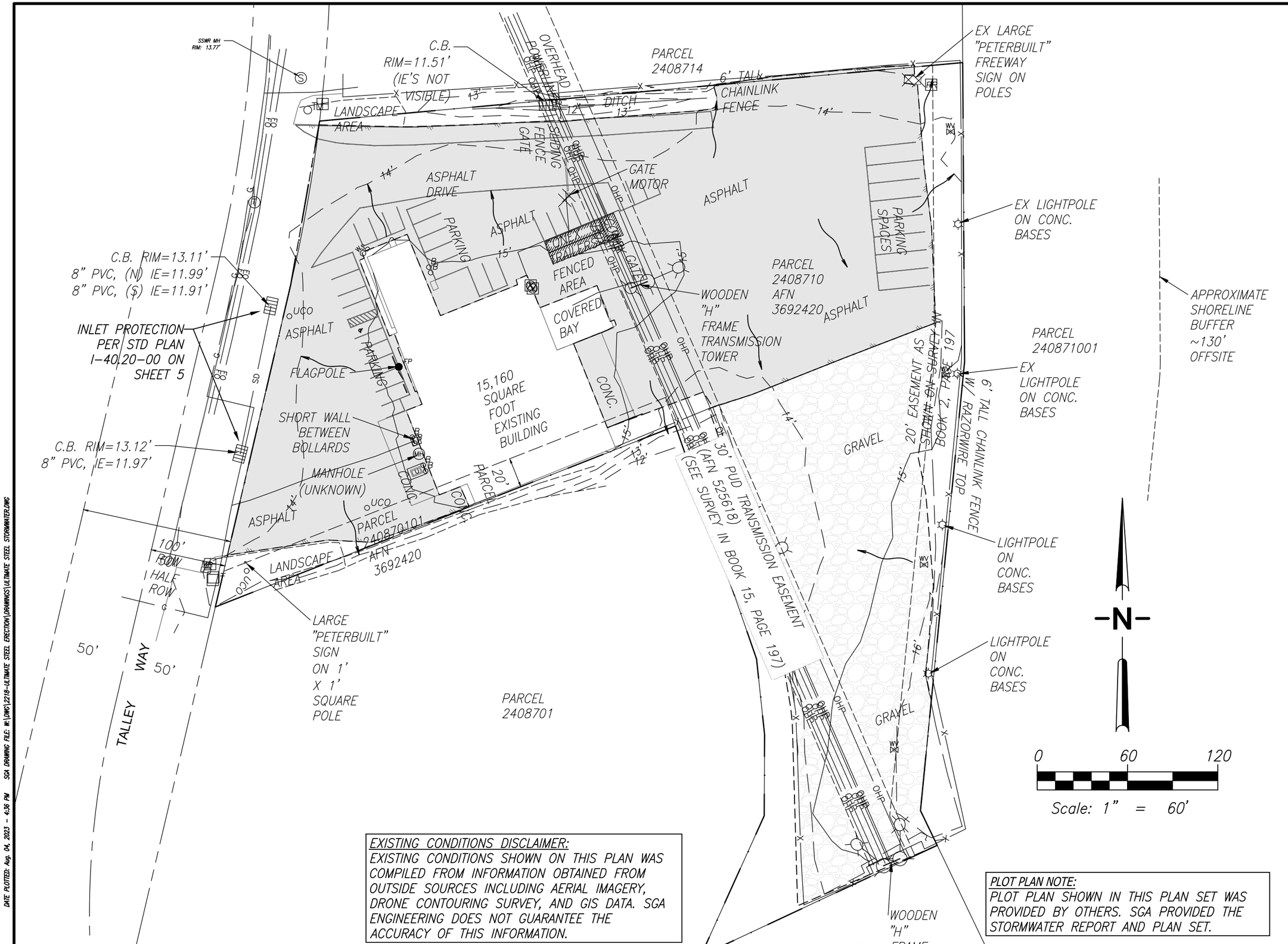

EXISTING CONDITIONS DISCLAIMER:
EXISTING CONDITIONS SHOWN ON THIS PLAN WAS COMPILED FROM INFORMATION OBTAINED FROM OUTSIDE SOURCES INCLUDING AERIAL IMAGERY, DRONE CONTOURING SURVEY, AND GIS DATA. SGA ENGINEERING DOES NOT GUARANTEE THE ACCURACY OF THIS INFORMATION.

PLOT PLAN NOTE:
PLOT PLAN SHOWN IN THIS PLAN SET WAS PROVIDED BY OTHERS. SGA PROVIDED THE STORMWATER REPORT AND PLAN SET.

SGA ENGINEERING & DESIGN
CIVIL ENGINEERING ~ LAND PLANNING
DEVELOPMENT SERVICES
LANDSCAPE ARCHITECTURE

2005 BROADWAY
VANCOUVER, WA 98663
PHONE (360)993-0911
FAX (360)993-0912

EXISTING CONDITIONS SHEET

ULTIMATE STEEL

KELSO WASHINGTON

REVISIONS

DESIGNED BY:	KMF
DRAWN BY:	KMF
CHECKED BY:	KRS
SCALE:	1" = 60'

JOB NUMBER	SHEET
2218	2 of 6

DATE PLOTTED: Aug. 04, 2023 - 4:36 PM SGA DRAWING FILE: W:\DWG\2218-ULTIMATE STEEL ERECTION\DRAWINGS\ULTIMATE STEEL STORMWATERLONG

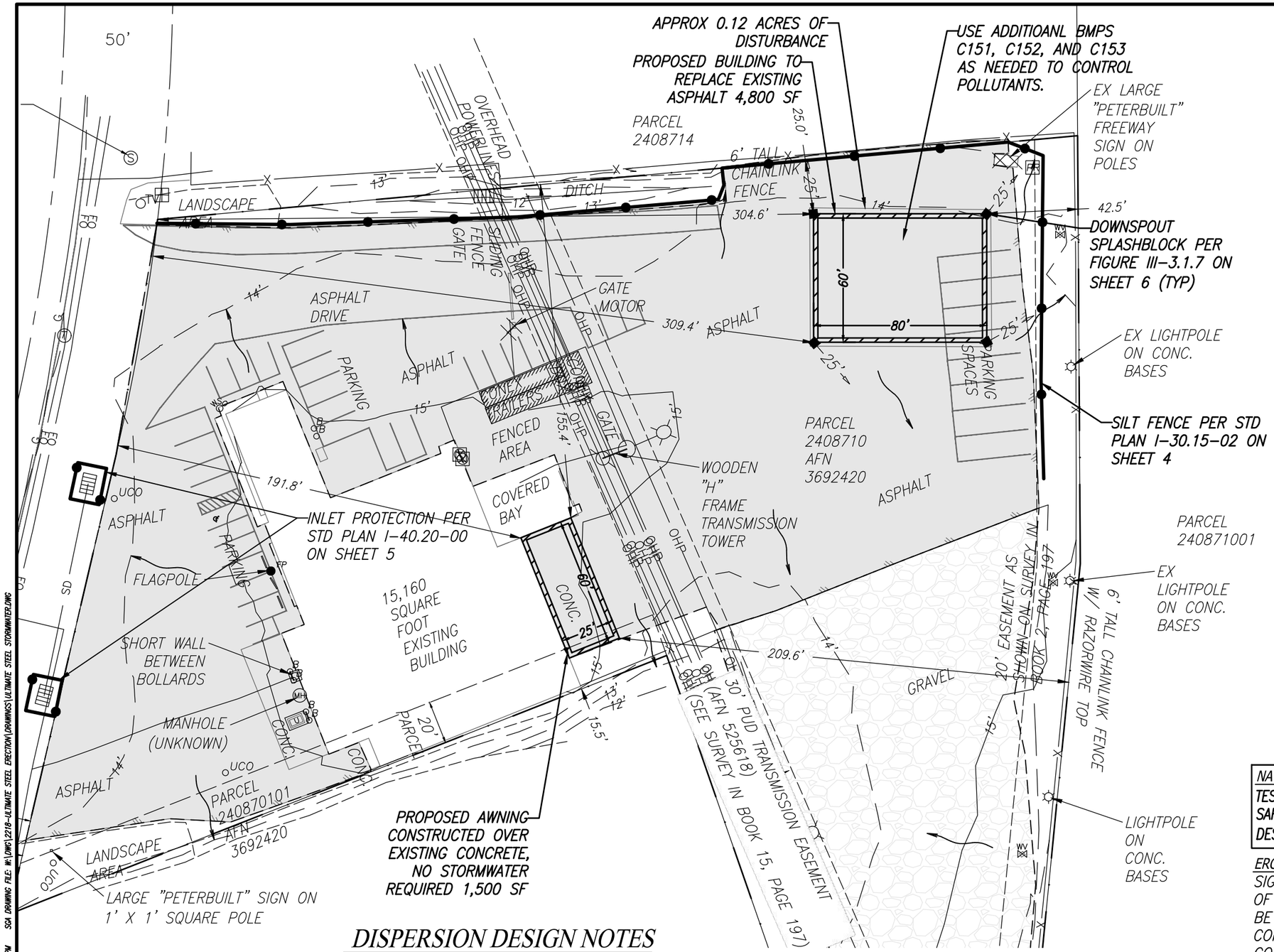

LEGEND

- PROPOSED BUILDING
- DISTURBED AREA
- TEMPORARY SILT FENCE (PER STD PLAN I-30.15-02) OR TEMPORARY STRAW WATTLE
- 100 EXISTING MAJOR CONTOURS
- FLOW ARROW
- PROPOSED DRIVEWAY
- EXISTING DRIVEWAY

DISPERSION DESIGN NOTES

- ALL RUNOFF IS WITHIN THE SAME TDA AND HAS BEEN DIRECTED TOWARD THE EXISTING STORM FLOW PATHS
- ALL DISTURBED AREA IS TO BE PER BMP T5.13 POST-CONSTRUCTION SOIL QUANTITY AND DEPTH. CONTRACTOR TO MINIMIZE DISTURBED AREA AND PRESERVE NATIVE VEGETATION FLOW PATH AREAS AS MUCH AS POSSIBLE DURING CONSTRUCTION
- ALL ROOF LINES ARE TO BE 3" OR 4" ADS PIPE WITH MIN 2% SLOPE
- ROOF AREA DISPERSED WITH SPLASHBLOCKS PER BMP T5.10C. (MAXIMUM 700 SF PER SPLASHBLOCK).
- SLOPE GROUND AT 2% MIN. FOR 5' AWAY FROM BUILDING FOUNDATIONS (ALL SIDES OF STRUCTURE)

0 50 100

Scale: 1" = 50'

NATIVE SOIL INFILTRATION RATES:

TESTED INFILTRATION RATE = 0.08 IN/HR
SAFETY FACTOR OF = 2
DESIGNED INFILTRATION RATE = 0.04 IN/HR

EROSION NOTE:

SIGNIFICANT VARIATION AND DEGREE OF EROSION CONTROL EFFORT WILL BE DICTATED BY WEATHER CONDITIONS. THE DEVELOPER AND CONTRACTOR SHOULD BE PREPARED TO PROVIDE EXTRA EROSION CONTROL PROVISIONS AND EFFORT DURING WINTER & WET WEATHER CONDITIONS BEYOND THAT NORMALLY REQUIRED DURING SUMMER AND DRY WEATHER CONDITIONS. FINE GRAINED AND UNCONSOLIDATED SOILS ON SLOPING SITES MAY BECOME UNSTABLE WHEN SUBJECT TO EXCESSIVE MOISTURE.

SGA ENGINEERING & DESIGN
CIVIL ENGINEERING ~ LAND PLANNING
DEVELOPMENT SERVICES
LANDSCAPE ARCHITECTURE

2005 BROADWAY
VANCOUVER, WA 98663
PHONE (360)993-0911
FAX (360)993-0912

EROSION CONTROL & DRAINAGE SHEET

ULTIMATE STEEL

KELSO WASHINGTON

REVISIONS

DESIGNED BY:	KMF
DRAWN BY:	KMF
CHECKED BY:	KRS
SCALE:	1" = 50'

JOB NUMBER	SHEET
2218	3 of 6

DATE PLOTTED: Aug. 04, 2023 - 4:37 PM SGA DRAWING FILE: W:\DWG\2218-ULTIMATE STEEL ERECTION\DRAWINGS\ULTIMATE STEEL STORMWATER.DWG

STORM DRAINAGE CONSTRUCTION NOTES

TRACER WIRE SHALL BE INSTALLED ALONG THE TOP OF ALL PIPE. EXTEND THE TRACER WIRE INTO MANHOLES AND ALL OTHER STRUCTURES, THEN UP THE INSIDE WALL OF STRUCTURES AND ATTACH THE WIRE TO THE TOP INSIDE OF THE STRUCTURE. PROVIDE 3 FEET OF COILED TRACER WIRE SLACK ATTACHED TO THE TOP INSIDE OF THE STRUCTURE.

MANHOLES AND TYPE 2 CATCH BASINS SHALL BE ADJUSTED TO GRADE FOLLOWING PAVING. ADJUST TO GRADE USING AN APPROVED FOUR-POINT ADJUSTMENT SYSTEM SUCH AS THE RIMRISER SHIMLESS ADJUSTMENT SYSTEM, OR APPROVED EQUAL.

STORM SEWERS AND APPURTENANCES SHALL BE CLEANED, AIR TESTED AND DEFLECTION TESTED AFTER BACKFILLING. THE LOW PRESSURE AIR TEST METHOD SHALL BE USED. TV INSPECTION SHALL BE PERFORMED AFTER CLEANING, TESTING AND CORRECTIONS ARE COMPLETE. CLEANING, AIR TESTING, INFILTRATION TESTING, DEFLECTION TESTING, AND TV INSPECTION SHALL BE COMPLETED PRIOR TO PAVEMENT RESTORATION OF THE TRENCH. AN ELECTRONIC COPY OF THE TV INSPECTION VIDEO AND THE TV INSPECTION REPORT SHALL BE PROVIDED TO THE INSPECTOR. TOP LIFT OF PAVING SHALL NOT BE PLACED UNTIL THE INSPECTOR HAS APPROVED THE TV INSPECTION.

ALL MANHOLES SHALL BE WATERTIGHT. FOLLOWING BACKFILL AND PRIOR TO FINAL PAVING, PERFORM VACUUM TESTING ON MANHOLES PER THE REQUIREMENTS OF THE SUPPLEMENT TO STANDARD PLAN B-15.20-01.

AS-BUILT DRAWINGS AND TV REPORTS SHALL BE PROVIDED PRIOR TO FINAL ACCEPTANCE.

N.T.S.

Kelso WASHINGTON	**STORM DRAIN GENERAL NOTES**	STANDARD PLAN NO. **KSD-000-21**
CITY OF KELSO DEPARTMENT OF COMMUNITY DEVELOPMENT & ENGINEERING	**CITY ENGINEER APPROVAL: Michael Kardas, P.E.**	DATE: **MAY 2021**

NOTES

1. Install the ends of the silt fence to point slightly upslope to prevent sediment from flowing around the ends of the fence.
2. Perform maintenance in accordance with **Standard Specifications 8-01.3(9)A and 8-01.3(15).**
3. Splices shall never be placed in low spots or sump locations. If splices are located in low or sump areas, the fence may need to be reinstalled unless the Project Engineer approves the installation.
4. Install silt fencing parallel to mapped contour lines.

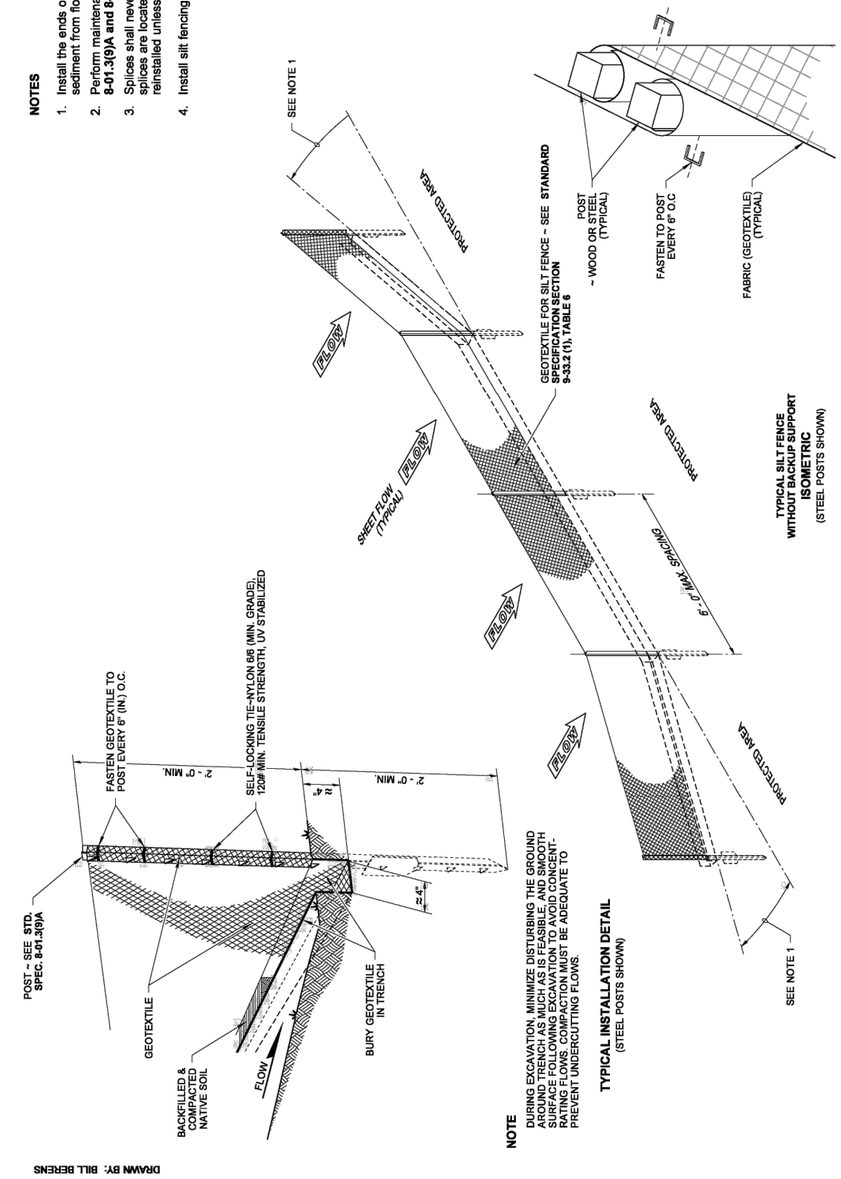

NOTE
DURING EXCAVATION, MINIMIZE DISTURBING THE GROUND AROUND TRENCH AS MUCH AS IS FEASIBLE, AND SMOOTH SURFACE FOLLOWING EXCAVATION TO AVOID CONCENTRATING FLOWS. COMPACTION MUST BE ADEQUATE TO PREVENT UNDERCUTTING FLOWS.

TYPICAL INSTALLATION DETAIL
(STEEL POSTS SHOWN)

SPLICED FENCE SECTIONS SHALL BE CLOSE ENOUGH TOGETHER TO PREVENT SILT LADEN WATER FROM ESCAPING THROUGH THE FENCE AT THE OVERLAP.

SPLICE DETAIL
(WOOD POSTS SHOWN)

TYPICAL SILT FENCE WITHOUT BACKUP SUPPORT ISOMETRIC
(STEEL POSTS SHOWN)

STATE OF WASHINGTON REGISTERED LANDSCAPE ARCHITECT
SANDRA L. SALISBURY
CERTIFICATE NO. 000860

NOTE: THIS PLAN IS NOT A LEGAL ENGINEERING DOCUMENT UNLESS IT BEARS THE ENGINEER'S SEAL AND SIGNATURE. APPROVED FOR PUBLICATION, A COPY ON FILE AT THE WASHINGTON STATE DEPARTMENT OF TRANSPORTATION. A COPY MAY BE OBTAINED UPON REQUEST.

SILT FENCE

STANDARD PLAN I-30.15-02
SHEET 1 OF 1 SHEET
APPROVED FOR PUBLICATION
Pasco Bakotich III 3/22/13
STATE DESIGN ENGINEER DATE
Washington State Department of Transportation

SGA ENGINEERING & DESIGN
CIVIL ENGINEERING ~ LAND PLANNING
DEVELOPMENT SERVICES
LANDSCAPE ARCHITECTURE

2005 BROADWAY
VANCOUVER, WA 98663
PHONE (360)993-0911
FAX (360)993-0912

EROSION CONTROL NOTES

ULTIMATE STEEL

KELSO WASHINGTON

REVISIONS

DESIGNED BY:	KMF
DRAWN BY:	KMF
CHECKED BY:	KRS
SCALE:	N/A

JOB NUMBER	SHEET
2218	4 of 6

DATE PLOTTED: Aug. 04, 2023 - 4:37 PM SGA DRAWING FILE: W:\DWG\2218-ULTIMATE STEEL ERECTION\DRAWINGS\ULTIMATE STEEL STORMWATER.DWG

DRAWN BY: FERN LIDDELL

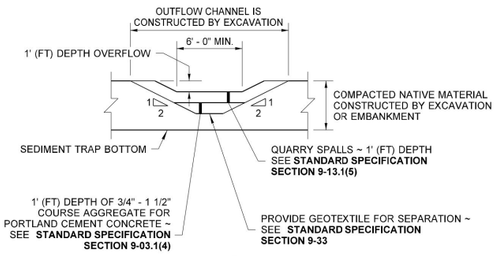

SECTION A

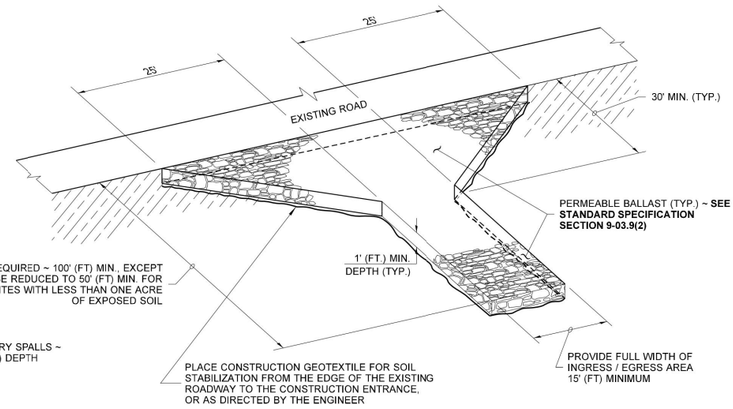

ISOMETRIC VIEW

STABILIZED CONSTRUCTION ENTRANCE

STABILIZED CONSTRUCTION ENTRANCE SHALL MEET THE REQUIREMENTS OF **STANDARD SPECIFICATION SECTION 8-01.3(7).**

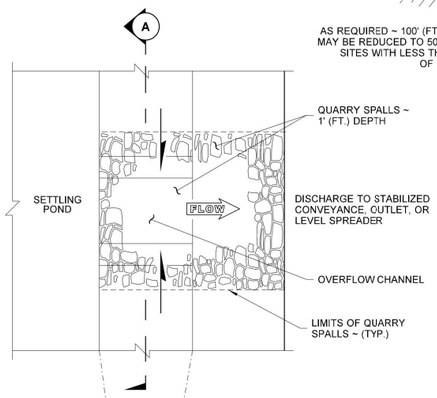

PARTIAL PLAN VIEW OF BERM

SHOWN LARGER FOR CLARITY

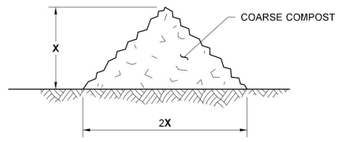

X = 1' - 0" FOR SLOPES 4H:1V OR FLATTER
X = 1' - 6" FOR SLOPES STEEPER THAN 4H:1V

TYPICAL SECTION

COMPOST BERM DETAIL

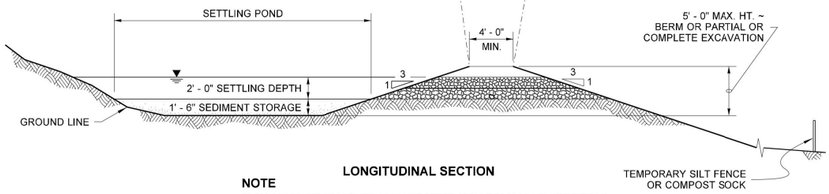

LONGITUDINAL SECTION

NOTE

PLACE GEOTEXTILE UNDER THE SPILLWAY AND SIDE SLOPES. PROVIDE A CONTINUOUS LAYER BETWEEN THE GRAVEL/ROCK AND THE NATIVE EARTHEN MATERIAL.

TEMPORARY SEDIMENT TRAP

STATE OF WASHINGTON REGISTERED LANDSCAPE ARCHITECT
JULI DEE HARTWIG
LICENSE NO. 1422
DATE: 06-21-17

MISCELLANEOUS EROSION CONTROL DETAILS

STANDARD PLAN I-80.10-02

SHEET 1 OF 1 SHEET

APPROVED FOR PUBLICATION
Carpenter, Jeff Jul 15 2016 2:28 PM
STATE DESIGN ENGINEER
Washington State Department of Transportation

DRAWN BY: LISA CYFORD

NOTES

1. Size the Below Inlet Grate Device (BIGD) for the storm water structure it will service.
2. The BIGD shall have a built-in high-flow relief system (overflow bypass).
3. The retrieval system must allow removal of the BIGD without spilling the collected material.
4. Perform maintenance in accordance with Standard Specification 8-01.3(15).

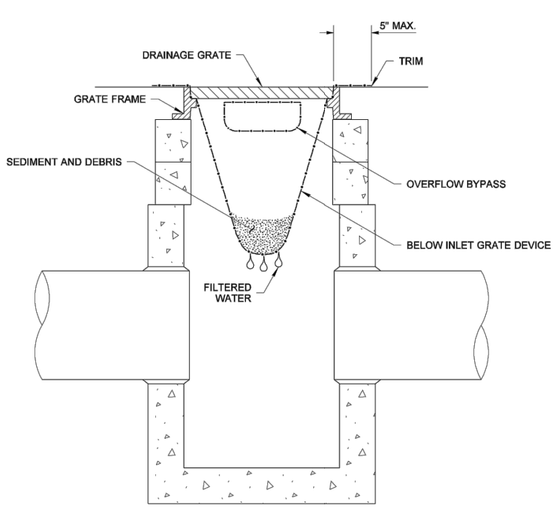

SECTION VIEW

NOT TO SCALE

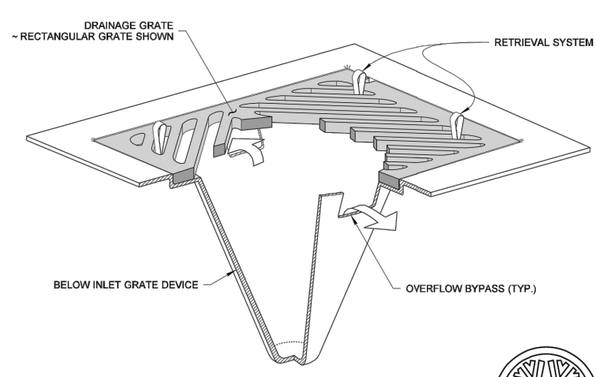

ISOMETRIC VIEW

STATE OF WASHINGTON REGISTERED LANDSCAPE ARCHITECT
MARK W. MAURER
CERTIFICATE NO. 000598

NOTE: THIS PLAN IS NOT A LEGAL ENGINEERING DOCUMENT BUT AN ELECTRONIC DUPLICATE. THE ORIGINAL, SIGNED BY THE ENGINEER AND APPROVED FOR PUBLICATION, IS KEPT ON FILE AT THE WASHINGTON STATE DEPARTMENT OF TRANSPORTATION. A COPY MAY BE OBTAINED UPON REQUEST.

STORM DRAIN INLET PROTECTION

STANDARD PLAN I-40.20-00

SHEET 1 OF 1 SHEET

APPROVED FOR PUBLICATION
Pasco Bakotich III 09-20-07
STATE DESIGN ENGINEER DATE
Washington State Department of Transportation

JOB NUMBER 2218

SHEET 5 of 6

DESIGNED BY: KMF
DRAWN BY: KMF
CHECKED BY: KRS
SCALE: N/A

REVISIONS

EROSION CONTROL DETAILS

ULTIMATE STEEL

KELSO WASHINGTON

SGA ENGINEERING & DESIGN
CIVIL ENGINEERING ~ LAND PLANNING
DEVELOPMENT SERVICES
LANDSCAPE ARCHITECTURE
2205 BROADWAY
VANCOUVER, WA 98663
PHONE (360)993-0911
FAX (360)993-0912

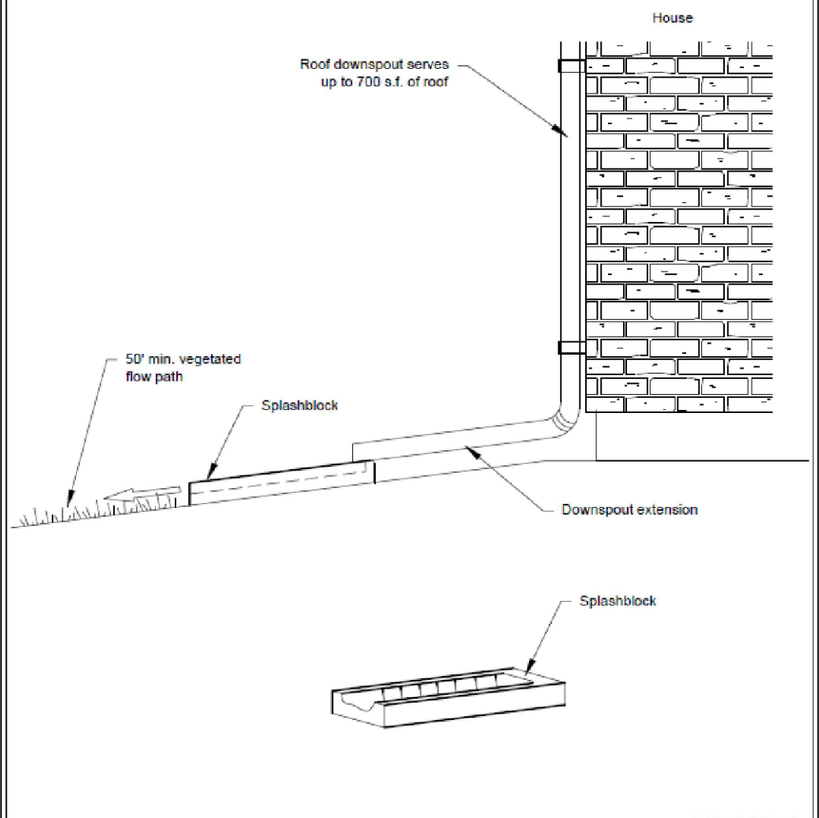

NOT TO SCALE

DEPARTMENT OF ECOLOGY
State of Washington

Figure III-3.1.7
Typical Downspout Splashblock Dispersion

Revised December 2015

Please see *http://www.ecy.wa.gov/copyright.html* for copyright notice including permissions, limitation of liability, and disclaimer.

SGA ENGINEERING & DESIGN
CIVIL ENGINEERING ~ LAND PLANNING
DEVELOPMENT SERVICES
LANDSCAPE ARCHITECTURE

2005 BROADWAY
VANCOUVER, WA 98663
PHONE (360)993-0911
FAX (360)993-0912

DRAINAGE DETAILS

ULTIMATE STEEL

KELSO WASHINGTON

REVISIONS

DESIGNED BY:	KMF
DRAWN BY:	KMF
CHECKED BY:	KRS
SCALE:	N/A

JOB NUMBER	SHEET
2218	6 of 6

DATE PLOTTED: Aug. 04, 2023 - 4:37 PM SGA DRAWING FILE: W:\DWG\2218-ULTIMATE STEEL ERECTION\DRAWINGS\ULTIMATE STEEL STORMWATER.DWG